MSC冗余接线说明

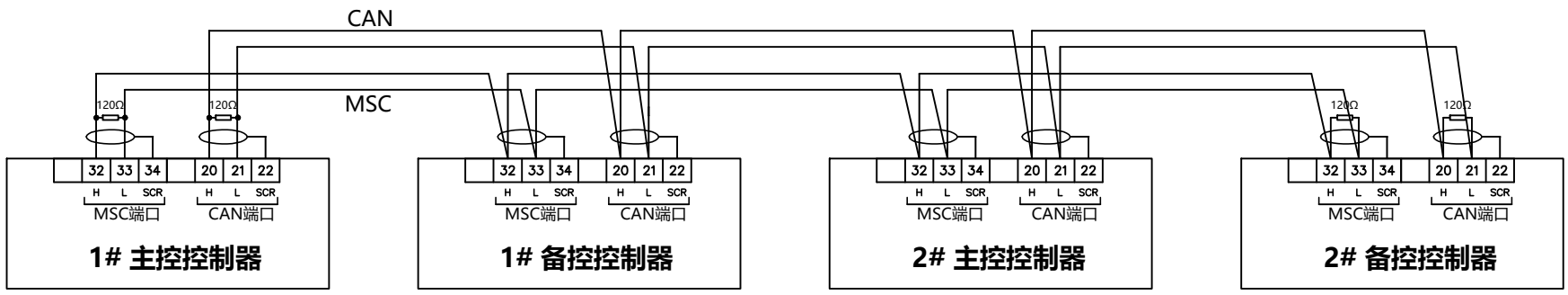

数据交换冗余接线说明

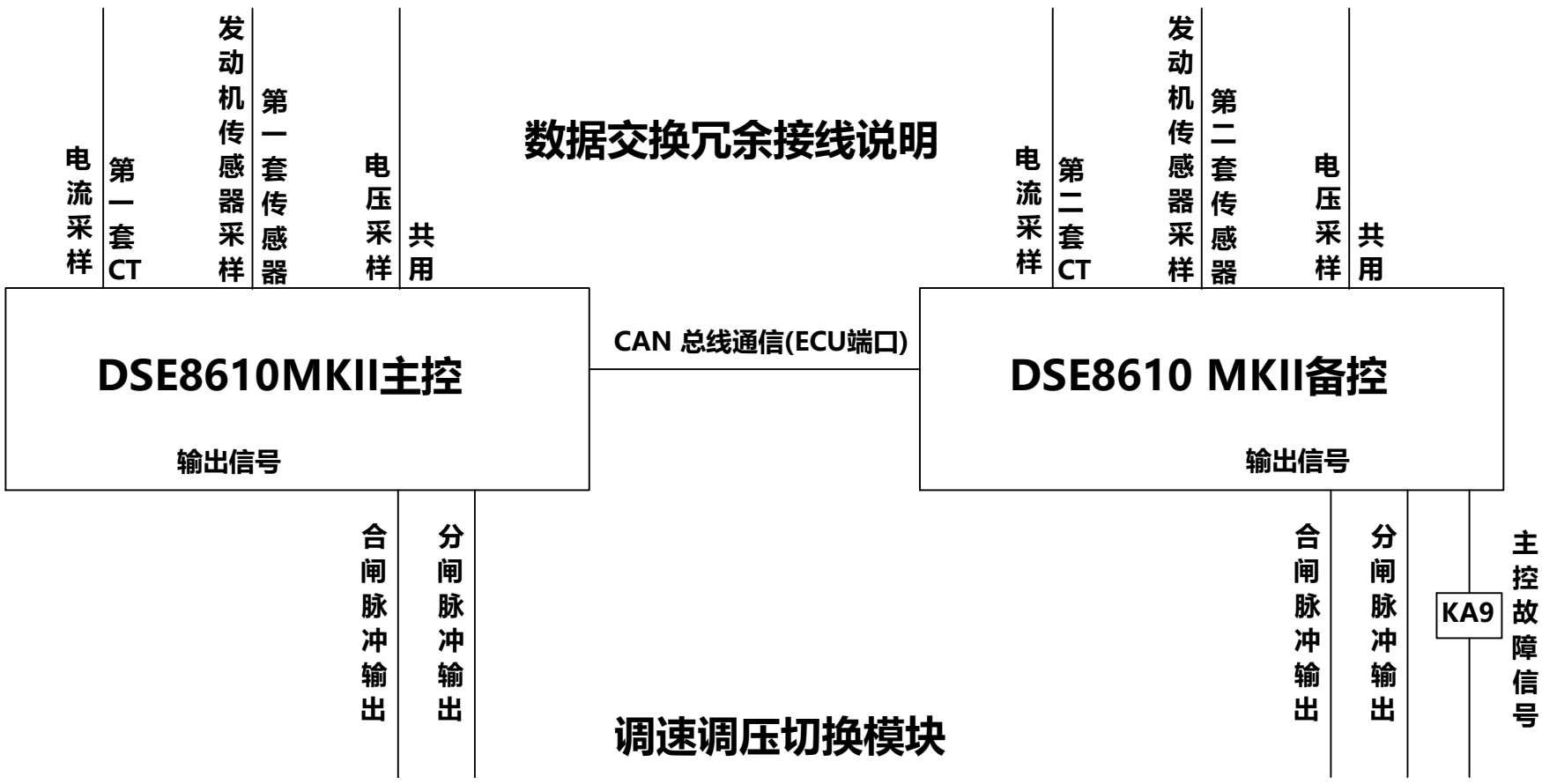

调速调压切换模块

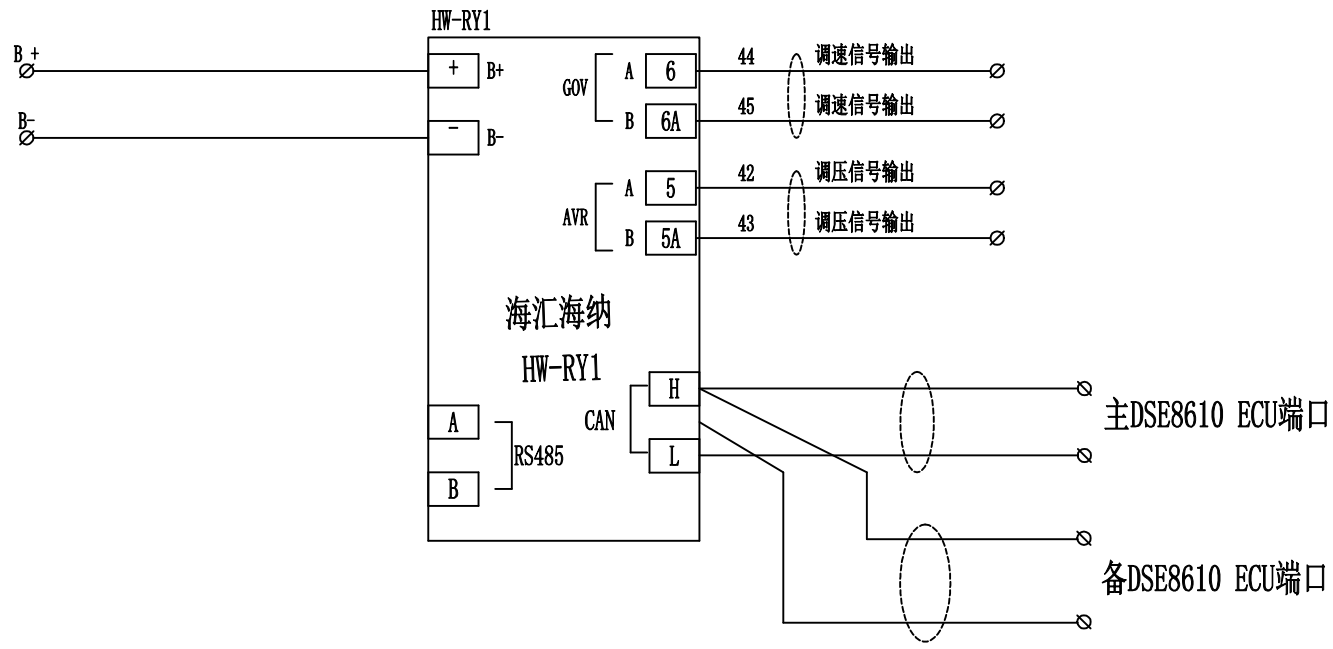

发动机ECU端口到各个产品的接线图

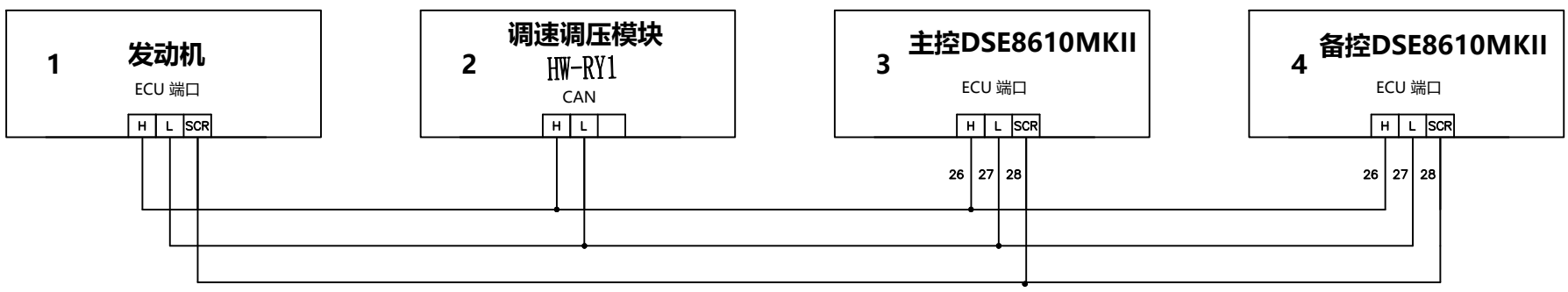

DSE8610 MKII Redundancy controller wiring diagram

UNITS = NA			
	AS	15/02/16	
	AS	09/12/15	
TOLERANCE	REVISION	DATE	
NA	CHK.		
	CHK.		
	DRN. AS	31/10/14	

DSE

DEEP SEA ELECTRONICS PLC
HIGHFIELD HOUSE
HUNMANBY INDUSTRIAL EST.
N. YORKSHIRE, YO14 0PH

TITLE

DWG No. 035-221 | ISS No. 3 | SHEET 1/1